Aufschlagstücke | Impact pieces | Pièces intercalaires

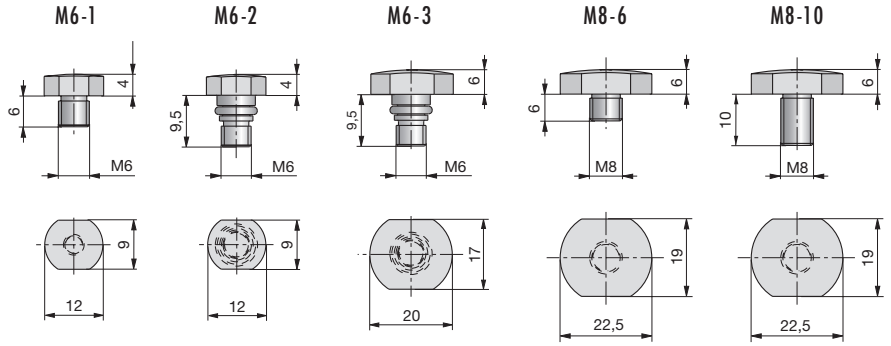

SN2942- ~58 HRC

SN2942-Type

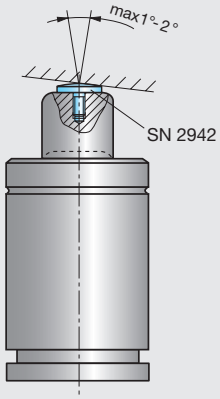

Type				
M6-1	M6-2	M6-3	M8-6	M8-10
für Gasdruckfeder / for gas spring / pour ressort à gaz				
SN2800 - 200	SN2805 - 300	SN2807- 750	SN2808 - 920	SN2820 - 500
SN2803 - 200	SN2808 - 275	SN2808 -V- 470	SN2808 -VS- 920	SN2820 - 750
SN2820 - 200	SN2808 -H- 275	SN2808 - 660	SN2808 -C- 1500	SN2820 - 1500
	SN2808 -R- 275	SN2808 -H- 660	SN2808 -V- 1500	SN2820 - 3000
	SN2808 -V- 350	SN2808 -R- 660	SN2808 - 1900	SN2820 - 5000
	SN2809 - 200	SN2808 - 800	SN2808 - 2400	SN2825 - 750
	SN2809 - R- 200	SN2809 - 600	SN2808 - 4250	SN2825 - 1500
	SN2809 - 400	SN2809 - 750	SN2809 - 1500	SN2825 - 1800
		SN2809 - 1000	SN2809 - 3000	SN2825 - 3000
		SN2830 - 500	SN2811 -C- 850	SN2825 - 5000
		SN2830 - 1000	SN2811 - 1000	
			SN2830 - 1500	